Introduction

Lecture 1

Copyright © Politehnica Bucharest and Wyliodrin SRL 2025, licensed under CC BY-SA 4.0.

Welcome

to the *Microprocessor Architecture* engineering class

You will learn

- how hardware works
- how to actually build your own hardware device
- the Rust programming Language

We expect

- to come to class
- ask a lot of questions

Team

Our team

Lectures

- Alexandru Radovici

Labs

- Teodor Dicu
- Alexandru Ungureanu
- Andrei Zamfir
- Dănuț Aldea
- Ioana Culic
- Cristiana Precup
- Layla El-Ghoul
- Gabriel Păvăloiu
- Andrei Batasev

Outline

Lectures

- 12 lectures
- 1 Q&A lecture for the project

Labs

- 12 labs

Project

- Build a hardware device running software written in Rust
- The cost for the hardware is around 150 RON
- Presented at PM Fair during the last week of the semester

Grading

Part	Description	Points
Lecture tests	You will have a test at every class with subjects from the previous class.	2p
Lab	Your work at every lab will be graded.	2p
Project	You will have to design and implement a hardware device. Grading will be done for the documentation, hardware design and software development.	3p
Exam	You will have to take an exam during the session.	4p
Total	*You will need at least 4.5 points to pass the subject.*	**11p**

Subjects

Theory

- How a microprocessor works
- How the ARM Cortex-M processor works
- Using digital signals to control devices
- Using analog signals to read data from sensors
- How interrupts work
- How asynchronous programming works (async/await)
- How embedded operating systems work

Practical

- How to use the Raspberry Pi Pico
  - Affordable
  - Powerful processor
  - Good documentation
- How to program in Rust
  - Memory Safe
  - *Java-like features, without Java's penalties*
  - Defines an embedded standard interface *embedded-hal*

Apollo Guidance Computer

We choose to go to the moon

John F. Kennedy, Rice University, 1961

in this decade and do the other things, ***not because they are easy, but because they are hard****, because* ***that goal will serve to organize and measure the best of our energies and skills****, because that challenge is one that we are willing to accept, one we are unwilling to postpone, and one which we intend to win, and the others, too.*

AGC

August 1966

Frequency	2.048 MHz
World Length	15 + 1 bit
RAM	4096 B
Storage	72 KB
Software API	AGC Assembly Language

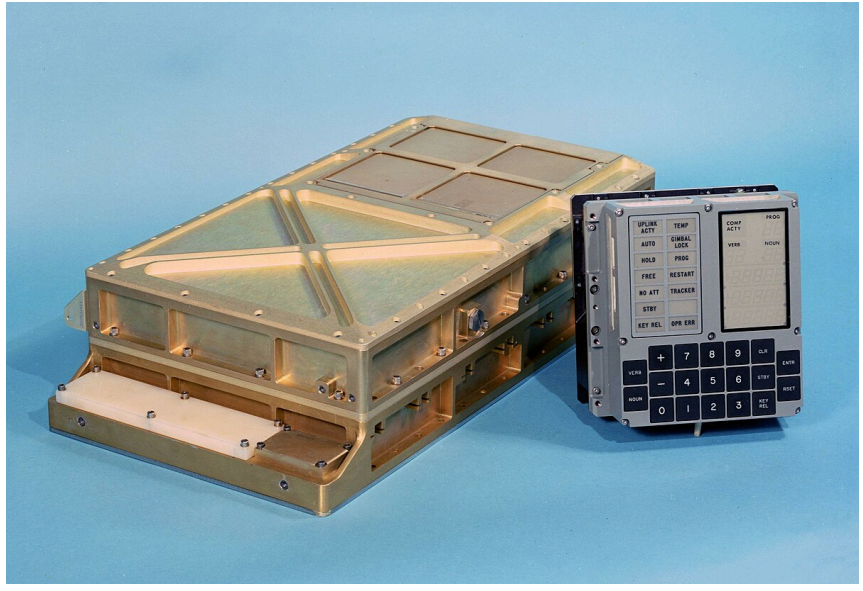

This landed the *moon eagle*.

DSKY

Display and keyboard

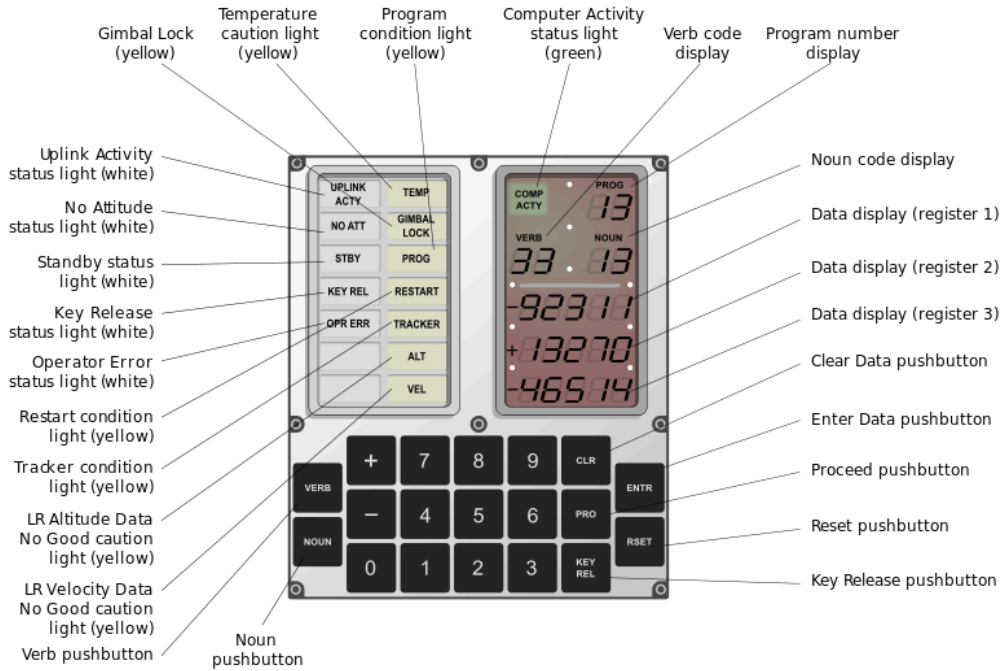

Simulator

What is a microprocessor?

Microcontroller (MCU)

Integrated in embedded systems for certain tasks

- low operating frequency (MHz)
- a lot of I/O ports
- controls hardware
- does not require an Operating System
- costs $0.1 - $25
- annual demand is billions

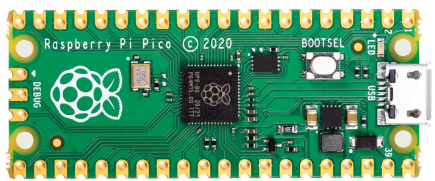

Microprocessor (CPU)

General purpose, for PC & workstations

- high operating frequency (GHz)
- limited number of I/O ports
- usually requires an Operating System
- costs $75 - $500
- annual demand is tens of millions

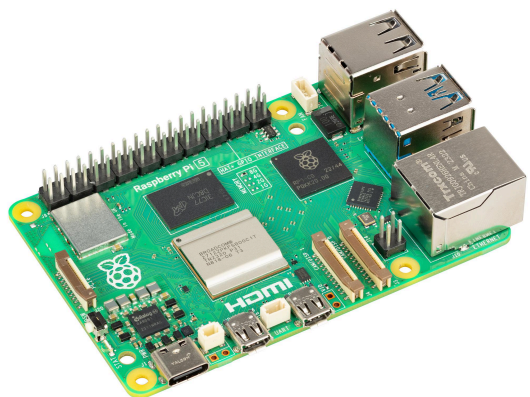

How a microprocessor works

This is a simple processor

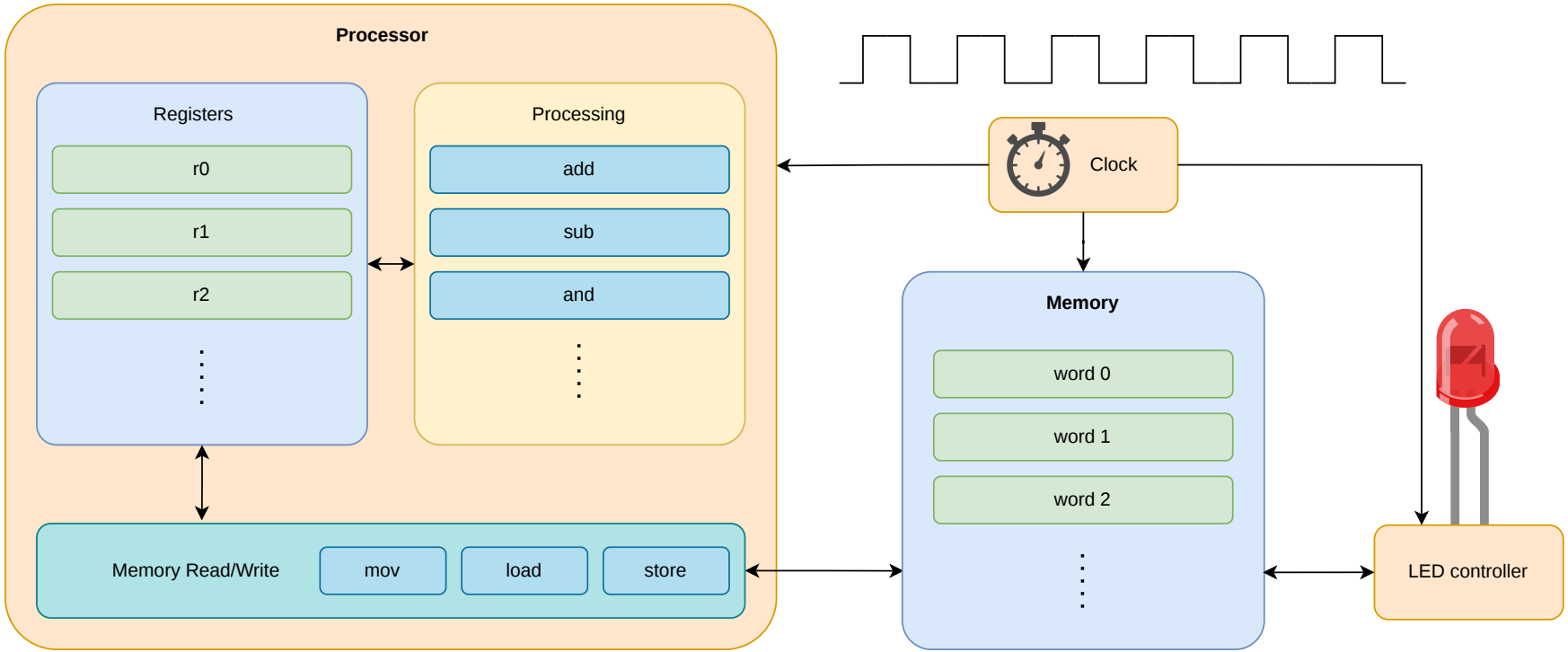

8 bit processor

a simple 8 bit processor with a text display

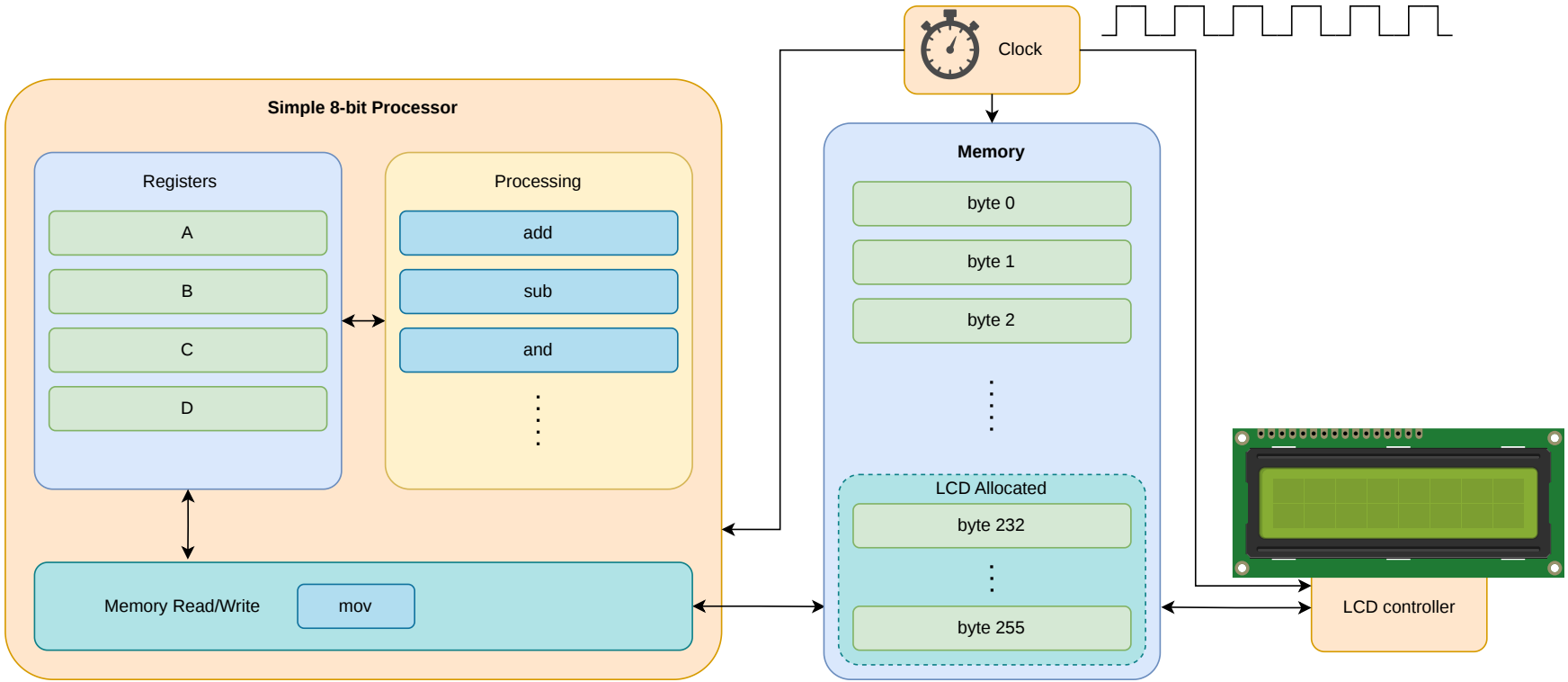

Programming

in Rust

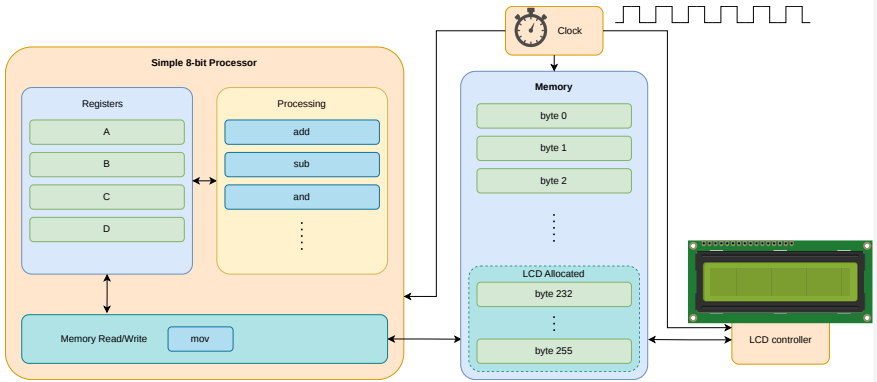


```rust
use eight_bit_processor::print;

static hello: &str = "Hello World!";

#[start]
fn start() {
    print(hello);
}
```

Assembly

```
  JMP start
hello: DB "Hello World!" ; Variable
       DB 0 ; String terminator
start:
  MOV C, hello    ; Point to var
  MOV D, 232  ; Point to output
  CALL print
        HLT             ; Stop execution
print:      ; print(C:*from, D:*to)
  PUSH A
  PUSH B
  MOV B, 0
.loop:
  MOV A, [C]  ; Get char from var
  MOV [D], A  ; Write to output
  INC C
  INC D
  CMP B, [C]  ; Check if end
  JNZ .loop ; jump if not

  POP B
  POP A
  RET
```

Demo

a working example for the previous code

Start

Real World Microcontrollers

Intel / AVR / PIC / TriCore / ARM Cortex-M / RISC-V rv32i(a)mc

Bibliography

for this section

Joseph Yiu, *The Definitive Guide to ARM® Cortex®-M0 and Cortex-M0+ Processors, 2nd Edition*

- Chapter 1 - *Introduction*
- Chapter 2 - *Technical Overview*

Intel

Vendor	Intel
ISA	8051, 8051
Word	8 bit
Frequency	a few MHz
Storage	?
Variants	*8048, 8051*

AVR

probably *Alf and Vegard's RISC processor*

Authors	Alf-Egil Bogen and Vegard Wollan
Vendor	Microchip (*Atmel*)
ISA	AVR
Word	8 bit
Frequency	1 - 20 MHz
Storage	4 - 256 KB
Variants	*ATmega*, *ATtiny*

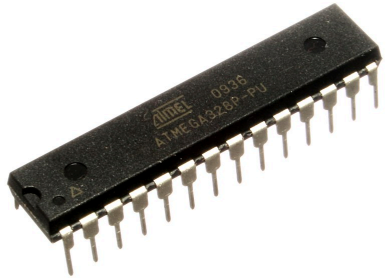

Board

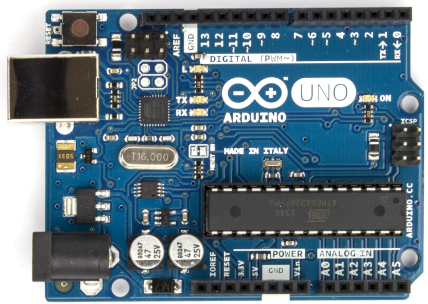

PIC

Peripheral Interface Controller / Programmable Intelligent Computer

Vendor	Microchip
ISA	PIC
Word	8 - 32
Frequency	1 - 20 MHz
Storage	256 B - 64 KB
Variants	*PIC10, PIC12, PIC16, PIC18, PIC24, PIC32*

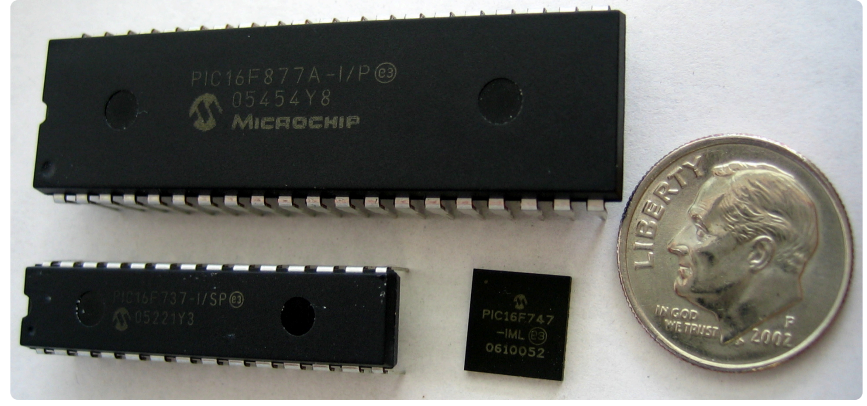

TriCore

Vendor	Infineon
ISA	AURIX32
Word	32 bit
Frequency	hundreds of MHz
Storage	a few MB
Variants	*TC2xx*, *TC3xx*, *TC4xx*

ARM Cortex-M

Advanced RISC Machine

Vendor	Qualcomm, NXP, Nordic Semiconductor, Broadcom, Raspberry Pi
ISA	ARMv6-M (Thumb and some Thumb-2) ARMv7-M (Thumb and Thumb-2) ARMv8-M (Thumb and Thumb-2)
Word	32
Frequency	1 - 900 MHz
Storage	up to a few MB
Variants	*M0*, *M0+*, *M3*, *M4*, *M7*, *M23*, *M33*

ARM Cortex-M Instruction Set

what the MCU can do

Fun Facts

- M0/M0+ has no `div`
- M0 - M3 have no floating point
- M23 and M33 have security extensions

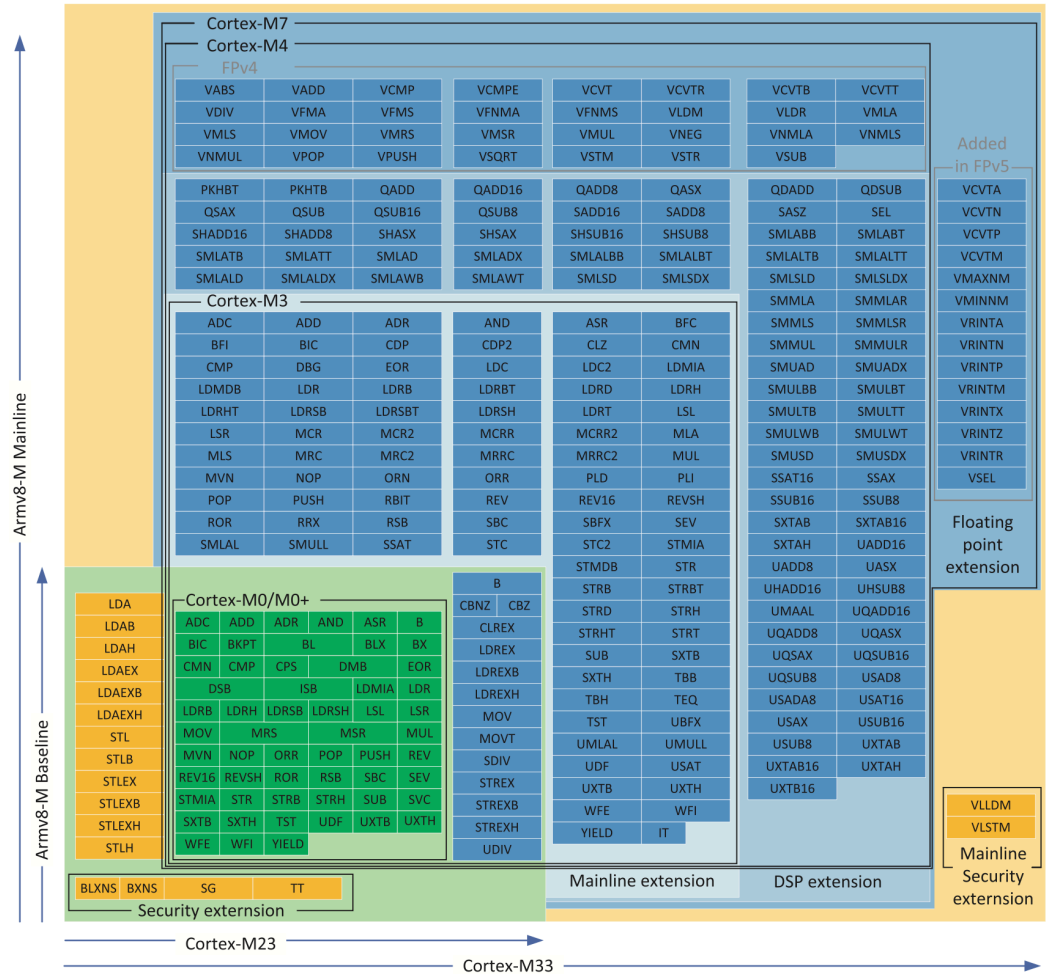

RISC-V rv32i(a)mc

Fifth generation of RISC ISA

Authors	University of California, Berkeley
Vendor	Espressif System
ISA	rv32i(a)mc
Word	32 bit
Frequency	1 - 200 MHz
Storage	4 - 256 KB
Variants	*rv32imc*, *rv32iamc*

RP2040

ARM Cortex-M0+, built by Raspberry Pi

Bibliography

for this section

Raspberry Pi Ltd, *RP2040 Datasheet*

- Chapter 1 - *Introduction*
- Chapter 2 - *System Description*
  - Section 2.1 - *Bus Fabric*

RP2040

the MCU

Vendor	Raspberry Pi
Variant	ARM Cortex-M0+
ISA	ARMv6-M (Thumb and some Thumb-2)
Cores	2
Word	32 bit
Frequency	up to 133 MHz
RAM	264 KB

Boards

that use RP2040

Raspberry Pi Pico (W)

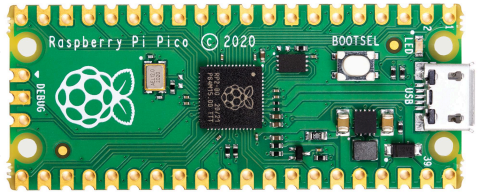

Arduino Nano RP2040 Connect

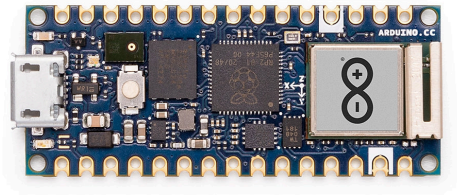

The Chip

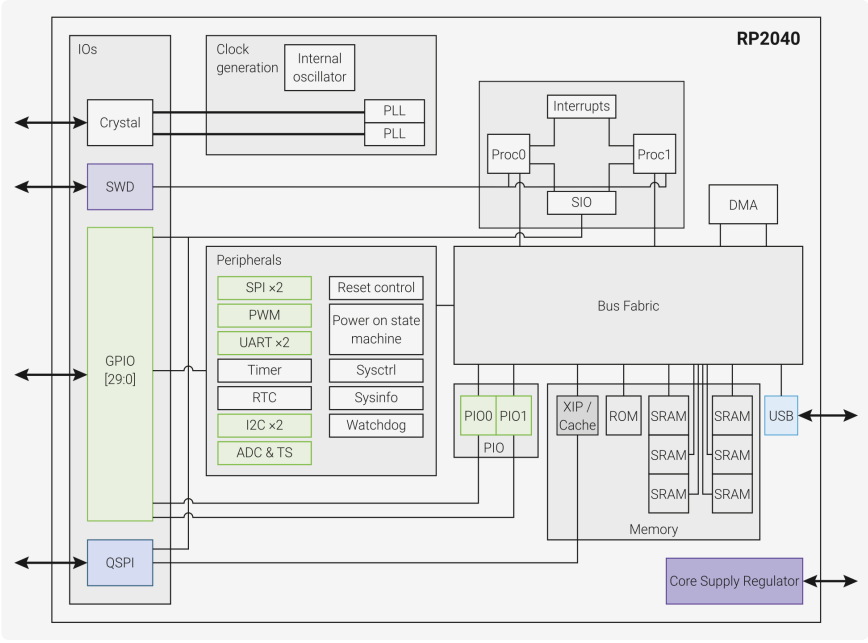

GPIO: General Purpose Input/Output
SWD: Debug Protocol
DMA: Direct Memory Access

Peripherals

SIO	Single Cycle I/O (implements GPIO)
PWM	Pulse Width Modulation
ADC	Analog to Digital Converter
(Q)SPI	(Quad) Serial Peripheral Interface
UART	Universal Async. Receiver/Transmitter
RTC	Real Time Clock
I2C	Inter-Integrated Circuit
PIO	Programmable Input/Output

Pins

have multiple functions

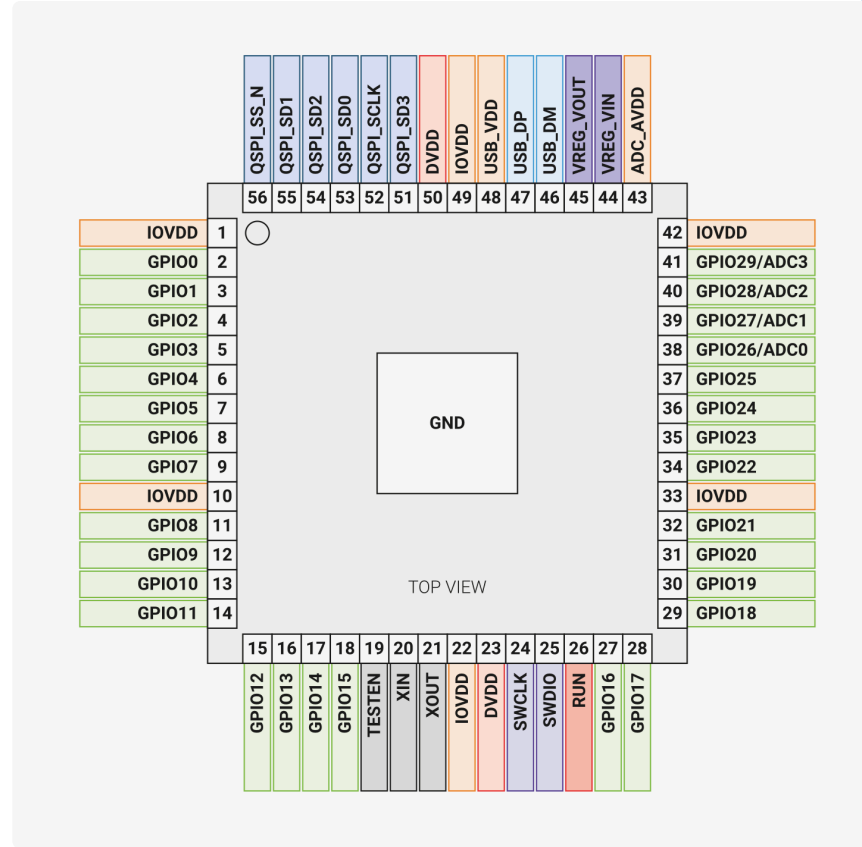

The Bus

that interconnects the cores with the peripherals

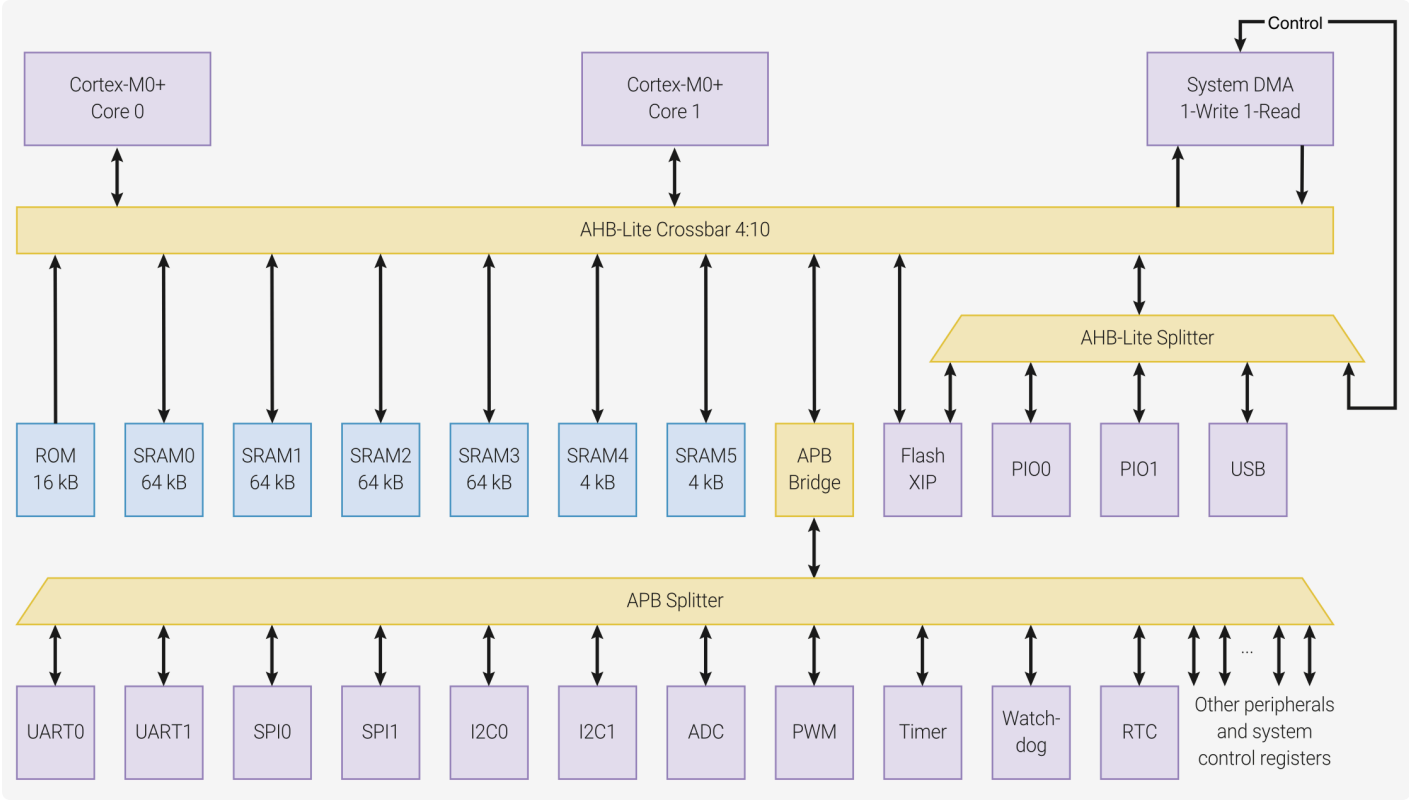

RP2350

ARM Cortex-M33, built by Raspberry Pi

Bibliography

for this section

Raspberry Pi Ltd, *RP2350 Datasheet*

- Chapter 1 - *Introduction*
- Chapter 2 - *System Description*
  - Section 2.1 - *Bus Fabric*

RP2350

the MCU

Vendor	Raspberry Pi
Variant	ARM Cortex-M33 / Hazard3 RISC-V
ISA	ARMv8-M / rv32iamc
Cores	2
Word	32 bit
Frequency	up to 150 MHz
RAM	520 KB

Boards

that use RP2350

Raspberry Pi Pico 2 (W)

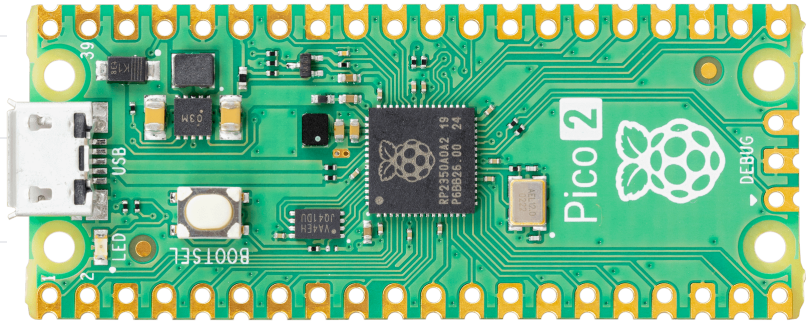

The Chip

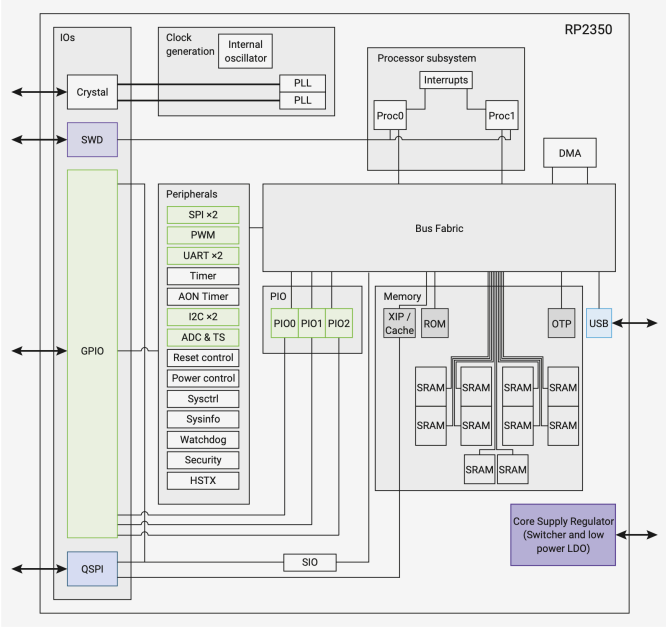

GPIO: General Purpose Input/Output
SWD: Debug Protocol
DMA: Direct Memory Access

Datasheet RP2350

Peripherals

SIO	Single Cycle I/O (implements GPIO)
PWM	Pulse Width Modulation
ADC	Analog to Digital Converter
(Q)SPI	(Quad) Serial Peripheral Interface
UART	Universal Async. Receiver/Transmitter
RTC	Real Time Clock
I2C	Inter-Integrated Circuit
PIO	Programmable Input/Output

Pins

have multiple functions

GPIO	F0	F1	F2	F3	F4	F5	F6	F7	F8	F9	F10	F11
0		SPI0 RX	UART0 TX	I2C0 SDA	PWM0 A	SIO	PIO0	PIO1	PIO2	QMI CS1n	USB OVCUR DET	
1		SPI0 CSn	UART0 RX	I2C0 SCL	PWM0 B	SIO	PIO0	PIO1	PIO2	TRACECLK	USB VBUS DET	
2		SPI0 SCK	UART0 CTS	I2C1 SDA	PWM1 A	SIO	PIO0	PIO1	PIO2	TRACEDATA0	USB VBUS EN	UART0 TX
3		SPI0 TX	UART0 RTS	I2C1 SCL	PWM1 B	SIO	PIO0	PIO1	PIO2	TRACEDATA1	USB OVCUR DET	UART0 RX
4		SPI0 RX	UART1 TX	I2C0 SDA	PWM2 A	SIO	PIO0	PIO1	PIO2	TRACEDATA2	USB VBUS DET	
5		SPI0 CSn	UART1 RX	I2C0 SCL	PWM2 B	SIO	PIO0	PIO1	PIO2	TRACEDATA3	USB VBUS EN	
6		SPI0 SCK	UART1 CTS	I2C1 SDA	PWM3 A	SIO	PIO0	PIO1	PIO2		USB OVCUR DET	UART1 TX
7		SPI0 TX	UART1 RTS	I2C1 SCL	PWM3 B	SIO	PIO0	PIO1	PIO2		USB VBUS DET	UART1 RX
8		SPI1 RX	UART1 TX	I2C0 SDA	PWM4 A	SIO	PIO0	PIO1	PIO2	QMI CS1n	USB VBUS EN	
9		SPI1 CSn	UART1 RX	I2C0 SCL	PWM4 B	SIO	PIO0	PIO1	PIO2		USB OVCUR DET	
10		SPI1 SCK	UART1 CTS	I2C1 SDA	PWM5 A	SIO	PIO0	PIO1	PIO2		USB VBUS DET	UART1 TX
11		SPI1 TX	UART1 RTS	I2C1 SCL	PWM5 B	SIO	PIO0	PIO1	PIO2		USB VBUS EN	UART1 RX
12	HSTX	SPI1 RX	UART0 TX	I2C0 SDA	PWM6 A	SIO	PIO0	PIO1	PIO2	CLOCK GPIN0	USB OVCUR DET	
13	HSTX	SPI1 CSn	UART0 RX	I2C0 SCL	PWM6 B	SIO	PIO0	PIO1	PIO2	CLOCK GPOUT0	USB VBUS DET	
14	HSTX	SPI1 SCK	UART0 CTS	I2C1 SDA	PWM7 A	SIO	PIO0	PIO1	PIO2	CLOCK GPIN1	USB VBUS EN	UART0 TX
15	HSTX	SPI1 TX	UART0 RTS	I2C1 SCL	PWM7 B	SIO	PIO0	PIO1	PIO2	CLOCK GPOUT1	USB OVCUR DET	UART0 RX
16	HSTX	SPI0 RX	UART0 TX	I2C0 SDA	PWM0 A	SIO	PIO0	PIO1	PIO2		USB VBUS DET	
17	HSTX	SPI0 CSn	UART0 RX	I2C0 SCL	PWM0 B	SIO	PIO0	PIO1	PIO2		USB VBUS EN	
18	HSTX	SPI0 SCK	UART0 CTS	I2C1 SDA	PWM1 A	SIO	PIO0	PIO1	PIO2		USB OVCUR DET	UART0 TX
19	HSTX	SPI0 TX	UART0 RTS	I2C1 SCL	PWM1 B	SIO	PIO0	PIO1	PIO2	QMI CS1n	USB VBUS DET	UART0 RX
20		SPI0 RX	UART1 TX	I2C0 SDA	PWM2 A	SIO	PIO0	PIO1	PIO2	CLOCK GPIN0	USB VBUS EN	
21		SPI0 CSn	UART1 RX	I2C0 SCL	PWM2 B	SIO	PIO0	PIO1	PIO2	CLOCK GPOUT0	USB OVCUR DET	
22		SPI0 SCK	UART1 CTS	I2C1 SDA	PWM3 A	SIO	PIO0	PIO1	PIO2	CLOCK GPIN1	USB VBUS DET	UART1 TX

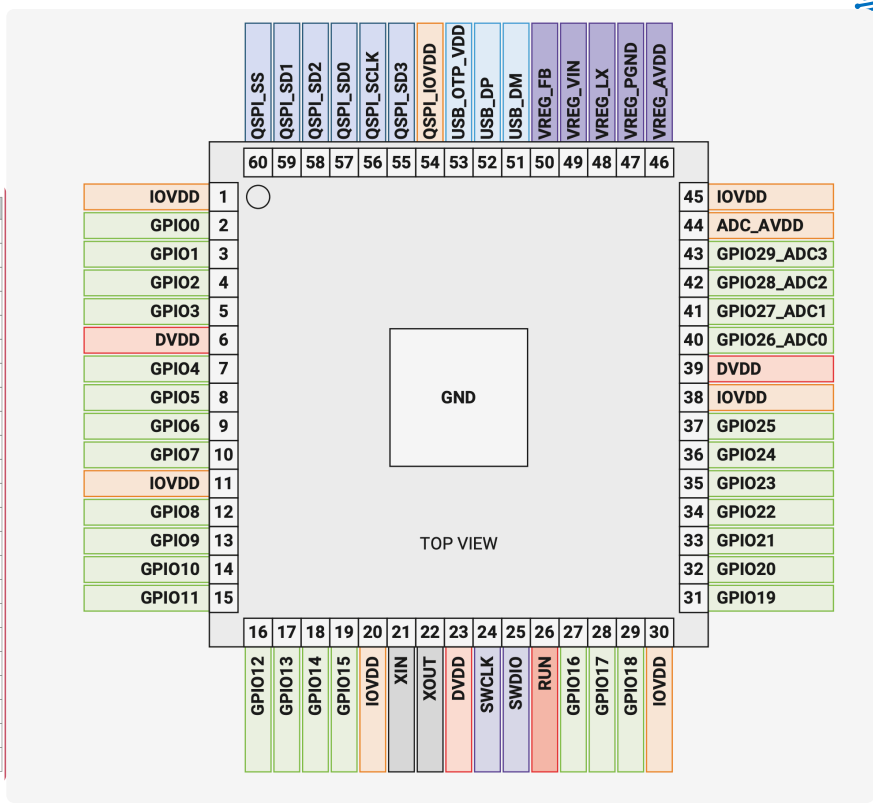

...

The Bus

that interconnects the cores with the peripherals

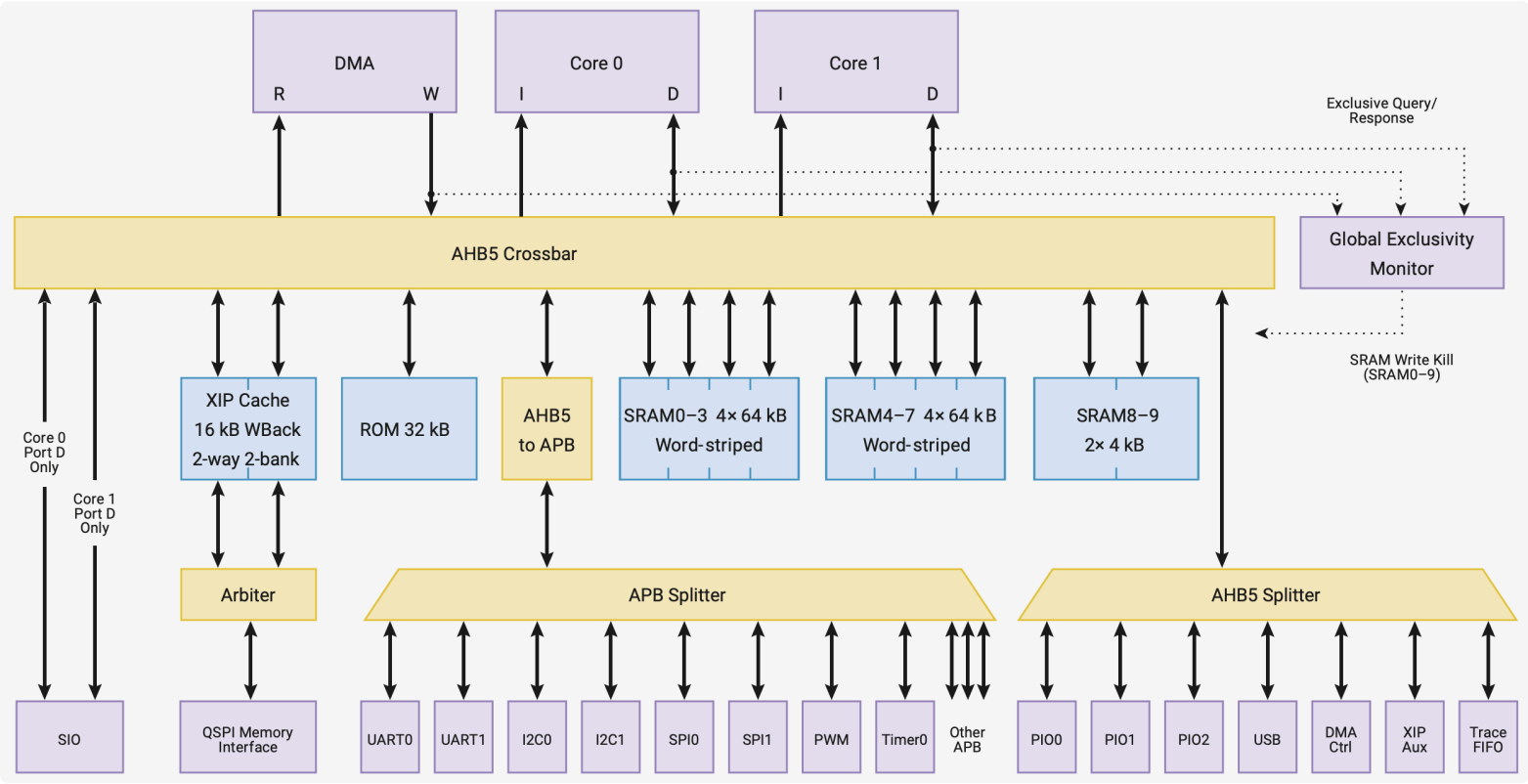

Lab Board

Schematics and PCB

- Raspberry Pi Pico/2 Slot
- RP2040 Debugger
- 4 buttons
- 5 LEDs
- potentiometer
- buzzer
- photoresistor
- I2C EEPROM
- BMP280 Pressure & Temp. sensor
- SPI LCD Display
- SD Card Reader
- USB-C connector
- servo connectors

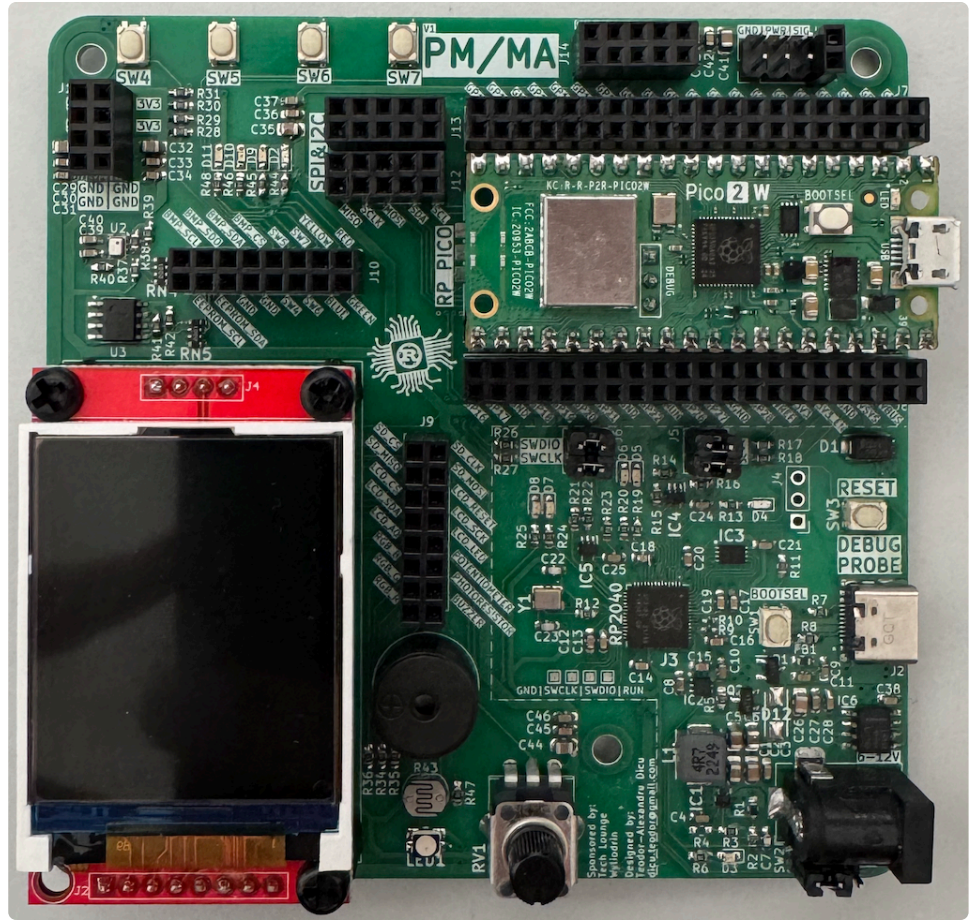

Project

suggested hardware

- the hardware should not cost more than 150 RON
- we suggest having a Raspberry Pi Pico with a debugger

Raspberry Pi Pico 2W + Debug Probe

Raspberry Pi Pico 2W + Raspberry Pi Pico 1

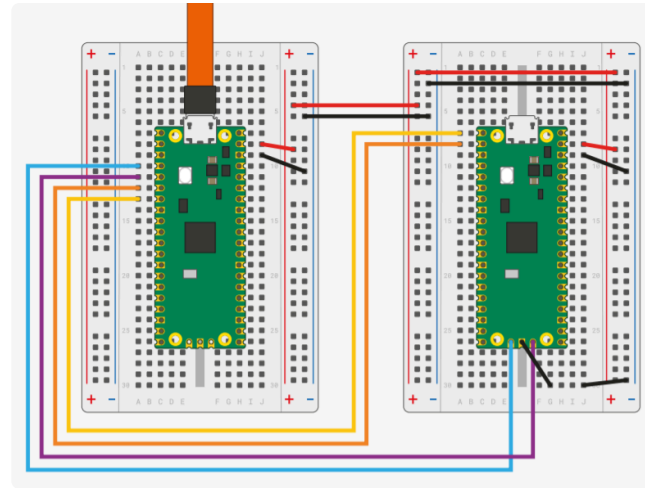

Bitwise Ops

How to set and clear bits

Set bit

set the `1` on position `bit` of `register`

```rust
fn set_bit(register: usize, bit: u8) -> usize {
    // assume register is 0b1000, bit is 2
    //   1 << 2 is 0b0100
    //   0b1000 | 0b0100 is 0b1100
    register | 1 << bit
}
```

Set multiple bits

```rust
fn set_bits(register: usize, bits: usize) -> usize {
    // assume register is 0b1000, bits is 0b0111
    //   0b1000 | 0b0111 is 0b1111
    register | bits
}
```

Clear bit

Set the `0` on position `bit` of `register`

```rust
fn clear_bit(register: usize, bit: u8) -> usize {
    // assume register is 0b1100, bit is 2
    //   1 << 2 is 0b0100
    //   !(1 << 2) is 0b1011
    //   0b1100 & 0b1011 is 0b1000
    register & !(1 << bit)
}
```

Clear multiple bits

```rust
fn clear_bits(register: usize, bits: usize) -> usize {
    // assume register is 0b1111, bits is 0b0111
    //   !bits = 0b1000
    //   0b1111 & 0b1000 is 0b1000
    register & !bits
}
```

Flip bit

Flip the bit on position `bit` of `register`

```
fn flip_bit(register: usize, bit: u8) -> usize {
    // assume register is 0b1000, bit is 2
    //   1 << 2 is 0b0100
    //   0b1100 ^ 0b0100 is 0b1000
    register ^ 1 << bit
}
```

Flip multiple bits

```
fn flip_bits(register: usize, bits: usize) -> usize {
    // assume register is 0b1000, bits is 0b0111
    //   0b1000 ^ 0b0111 is 0b1111
    register ^ bits
}
```

Let’s see a combined operation for value extraction

- We presume an 32 bits ID = `0b1100_1010_1111_1100_0000_1111_0110_1101`
- And want to extract a portion `0b`**`1100_1010_1111`**`_1100_0000_1111_0110_1101`

```rust
const MASK: u32 = 0b0000_0000_0000_0000_0000_1111_1111_1111;

fn print_binary(label: &str, num: u32) {
    println!("{}: {:032b}", label, num);
}

fn main() {
    let large_id: u32 = 0b1100_1010_1111_1100_0000_1111_0110_1101;
    let extracted_bits = (large_id >> 20) & MASK;

   // Print values in binary
    print_binary("Original_", large_id);
    print_binary("Mask_____", MASK);
    print_binary("Extracted", extracted_bits);
}
/* RESULT
Original_: 11001010111111000000111101101101
Mask_____: 00000000000000000000111111111111
Extracted: 00000000000000000000110010101111 */
```

With nice formating

```rust
const MASK: u32 = 0b0000_0000_0000_0000_0000_1111_1111_1111;
fn format_binary(num: u32) -> String {
    (0..32).rev()
        .map(|i| {
            if i != 0 && i % 4 == 0 {
                format!("{}_", (num >> i) & 1)
            } else {
                format!("{}", (num >> i) & 1)
            }
        })
        .collect::<Vec<_>>()
        .join("")
}
fn print_binary(label: &str, num: u32) { println!("{}: {}", label, format_binary(num));}
fn main() {
    let large_id: u32 = 0b1100_1010_1111_1100_0000_1111_0110_1101;
    let extracted_bits = (large_id >> 20) & MASK;
    print_binary("Original_", large_id);
    print_binary("Extracted", extracted_bits);
}
/* RESULTS:
Original_: 1100_1010_1111_1100_0000_1111_0110_1101
Extracted: 0000_0000_0000_0000_0000_1100_1010_1111 */
```

Conclusion

we talked about

- How a processor functions
- Microcontrollers (MCU) / Microprocessors (CPU)
- Microcontroller architectures
- ARM Cortex-M
- RP2040 and RP2350